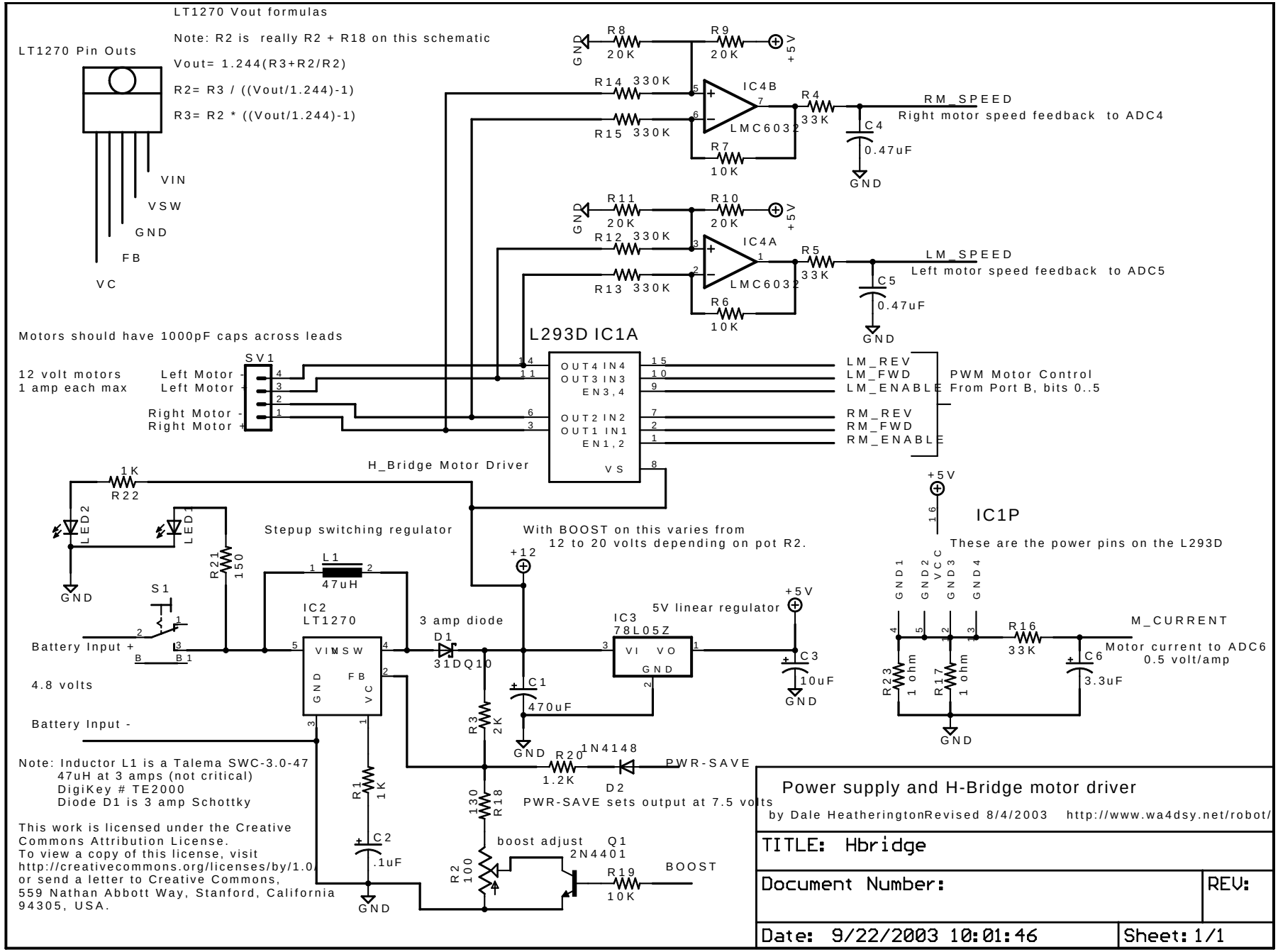
LT1270 Vout formulas
Note: R2 is really R2 + R18 on this schematic
Vout= 1.244(R3+R2/R2)
R2= R3 / ((Vout/1.244)-1)
R3= R2 * ((Vout/1.244)-1)
LT1270 Pin Outs
VIN
VSW
GND
FB
VC
R8 20K
R9 20K
+5V
R14 330K
R15 330K
IC4B
LMC6032
R4 33K
C4 0.47uF
R7 10K
RM_SPEED
Right motor speed feedback to ADC4
R11 20K
R10 20K
R12 330K
R13 330K
IC4A
LMC6032
R5 33K
C5 0.47uF
R6 10K
LM_SPEED
Left motor speed feedback to ADC5
Motors should have 1000pF caps across leads
L293D IC1A
SV1
12 volt motors
1 amp each max
Left Motor -
Left Motor +
Right Motor -
Right Motor +
OUT4 IN4
OUT3 IN3
EN3,4
OUT2 IN2
OUT1 IN1
EN1,2
VS
LM_REV
LM_FWD
LM_ENABLE
RM_REV
RM_FWD
RM_ENABLE
PWM Motor Control
From Port B, bits 0..5
H_Bridge Motor Driver
1K R22
LED2
LED1
R21 150
Stepup switching regulator
L1 47uH
IC2 LT1270
VIN SW
GND FB VC
S1
Battery Input +
4.8 volts
Battery Input -
3 amp diode
D1 31DQ10
With BOOST on this varies from
12 to 20 volts depending on pot R2.
+12
C1 470uF
R3 2K
R20 1.2K
1N4148
D2
PWR-SAVE
PWR-SAVE sets output at 7.5 volts
R1 1K
C2 .1uF
R18 130
R2 100
boost adjust
Q1 2N4401
R19 10K
BOOST
5V linear regulator
IC3 78L05Z
VI VO
GND
C3 10uF
IC1P
These are the power pins on the L293D
GND1
GND2
VCC
GND3
GND4
R16 33K
M_CURRENT
Motor current to ADC6
0.5 volt/amp
C6 3.3uF
R23 1 ohm
R17 1 ohm
GND
Note: Inductor L1 is a Talema SWC-3.0-47
47uH at 3 amps (not critical)
DigiKey # TE2000
Diode D1 is 3 amp Schottky
This work is licensed under the Creative
Commons Attribution License.
To view a copy of this license, visit
http://creativecommons.org/licenses/by/1.0/
or send a letter to Creative Commons,
559 Nathan Abbott Way, Stanford, California
94305, USA.
Power supply and H-Bridge motor driver
by Dale HeatheringtonRevised 8/4/2003 http://www.wa4dsy.net/robot/
TITLE: Hbridge
Document Number:
REV:
Date: 9/22/2003 10:01:46
Sheet: 1/1